PRODUCT SPECIFICATION

F133

Sydney Head Office Phone: (02) 9542 4991
Sydney Head Office Fax: (02) 9542 4662
Brisbane 0400 494 368
Melbourne 0409 578 885
Auckland: 021 964 600
Email: sales@kethy.com

Material:	Anodised Aluminium
Article Number:	F133 / reference C / colour

A	C	P	W
154	128	30	16
278	224	30	16

Colours available:	Matt Anodised (MAT)

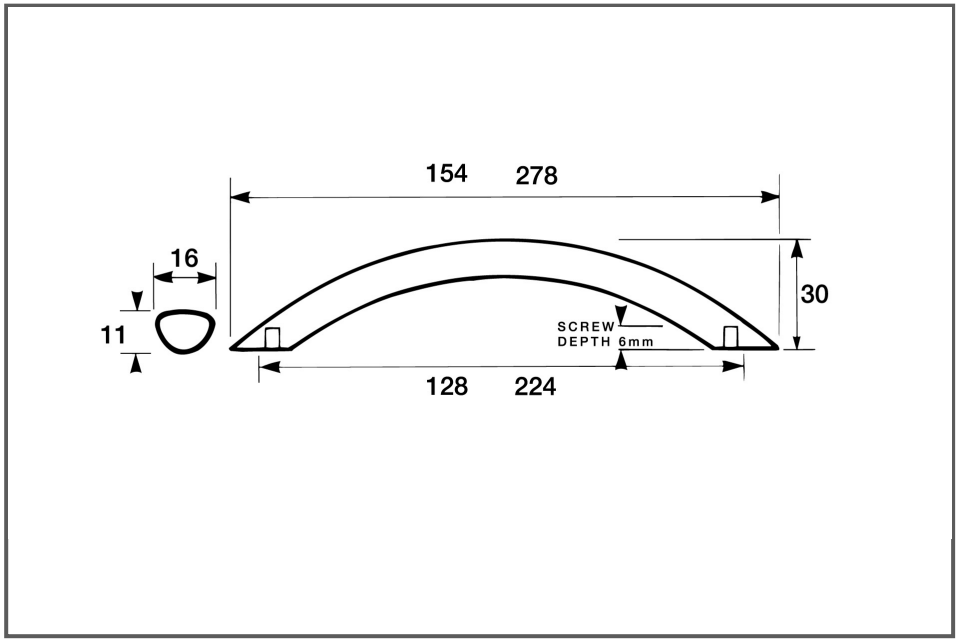

Kethy Australia