PRODUCT SPECIFICATION

HT173

Sydney Head Office Phone: (02) 9542 4991
Sydney Head Office Fax: (02) 9542 4662
Brisbane 0400 494 368
Melbourne 0409 578 885
Auckland: 021 964 600
Email: sales@kethy.com



Material:	Cast Iron
Article Number:	HT173/ reference C / colour



A	C	P	W
100	64	23	41

Colours available:	English Bronze (EB) Iron (IRON)

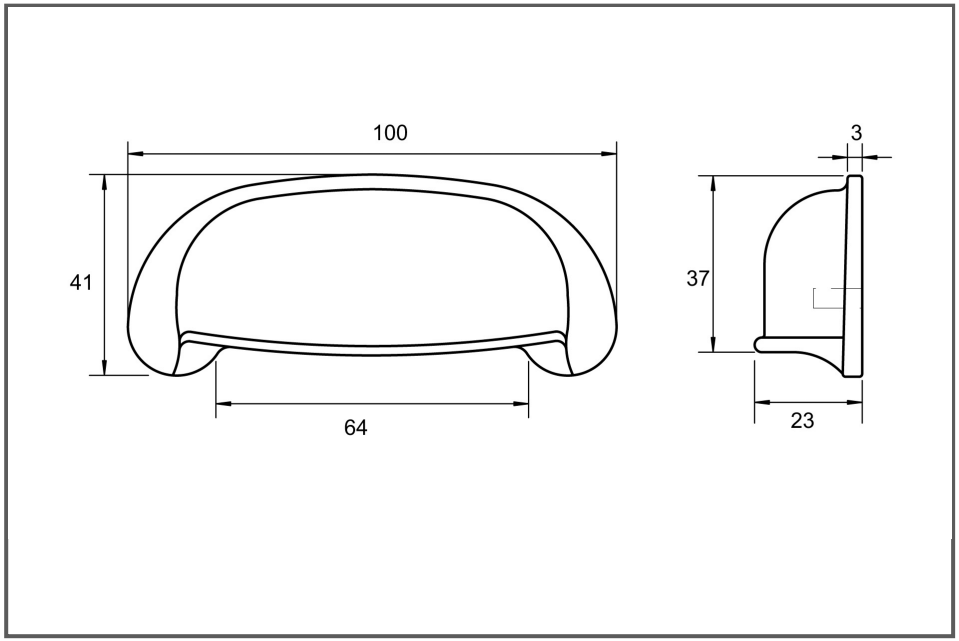

Kethy Australia